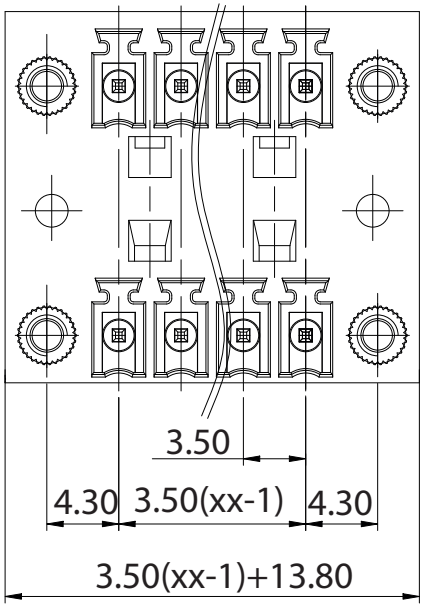

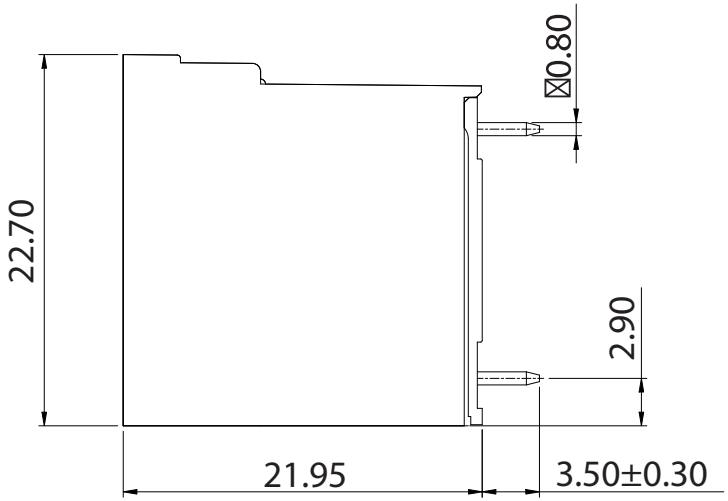

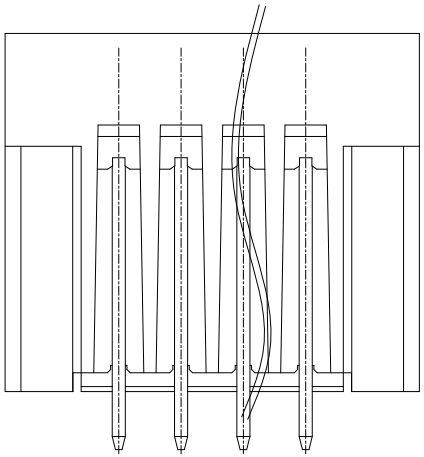

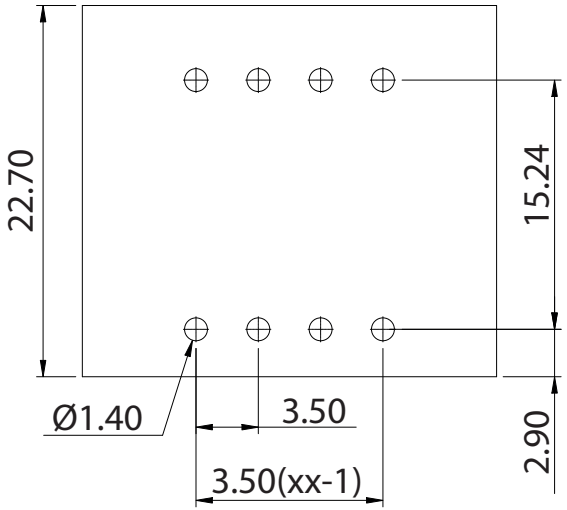

p.c.b. layout

Approvals

c UL us	8 A-300V

Electrical

Rated voltage IEC	160V
Rated current IEC	7A
Rated voltage UL	300V
Rated current UL	8A
Contact resistance	20mΩ
Insulation resistance	500MΩ/DC500V
Withstanding voltage	AC1600V1 min
Wire range	
Torque	
Temp. Range	-40°C+105°C
Stripping lenght	
Max sold. time	+250°C for 5 sec

Dimensions

Pitch	3,50 mm
Poles	2+2÷22+22

Material

Housing	PA66 UL94V0
Pin	Copper Alloy, tin plated
Cage	
Screws	
Side Block	
Nut screw	M2.5
Clamp	

General description of ordering code

Series	n. Poles	Pitch	Version	Color	Custom
MDL	02÷22	-3.5	-VF		

Version	Date
01/26	10/06/26

euro-block

RoHS Compliant Lead Free

CE

UNITS: mm	SHEET SIZE: ISO A4	SCALE: 10:1	
> 0 ~ 3	> 3 ~ 18	> 18 ~ 50	> 50 ~ 120
± 0.12	± 0.15	± 0.3	± 0.5

First angle projection

MDL-3.5-VF