| TOL. UNLESS SPECIAL SEE STANDARD TOLERANCE | | | | | Scale To Fit |
|---|---|---|---|---|---|
| NOMINAL DIMENSION | 0-30 | 30-100 | 100-200 | 200-400 | 400-1000 |
| 0 | ± 0.1 | ± 0.2 | ± 0.3 | ± 0.5 | ± 1 |
| 0.0 | ± 0.05 | ± 0.05 | ± 0.1 | ± 0.2 | ± 0.3 |
| 0.00 | ± 0.01 | ± 0.02 | ± 0.05 | ± 0.05 | ± 0.1 |

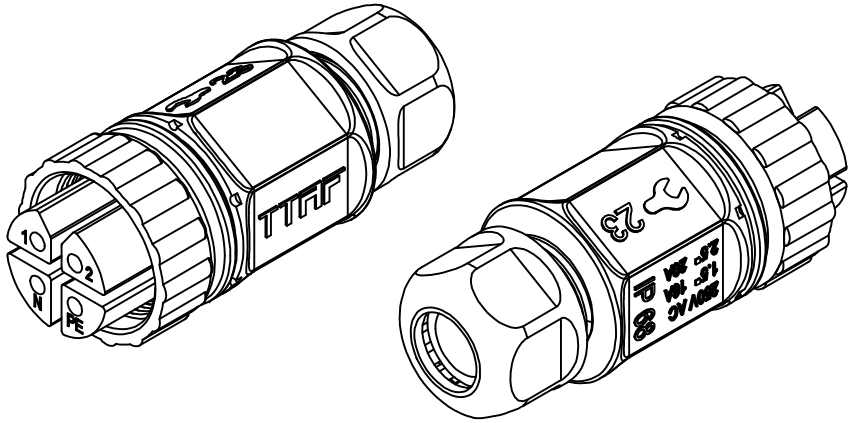


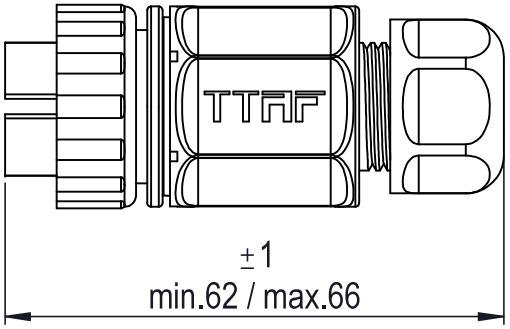


the cable O.D. used varies in size

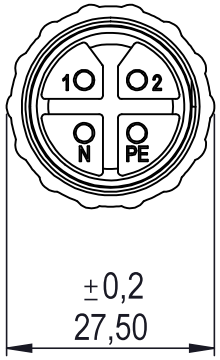


## Technical Specifications

| | |
|---|---|
| Number of Poles | 4 |
| Voltage Rating | 250VAC max. |
| Current Rating | 20A max. |
| Cable Cross Section Area | 0,5 ~2,5mm² |
| Durability Voltage | 3000VAC@60s. |
| Insulation Structure | 500 MΩ at 500VDC |
| Contact Resistance | 30 mΩ max. |
| Min Wire Size OD | 6mm |
| Max Wire Size OD | 10mm |
| Operating Temperature | -40°C ~ +85°C |
| IP Rating | IP68(10m / 60min.) |
| Mold Material | PA6 |
| Contact/Terminal Material | Nickel-Plated Brass |
| Seal Material | Silicone |

| Date | 03.07.2018 | Signature | Rev. | Revision Detail | Rev.Date | By | Drawing Description |
|---|---|---|---|---|---|---|---|
| Drawn | Zafer BOLUKBASI | | - | - | - | - | WPF-0400M20 |
| Checked | Dilek TUNCER | | | | | | |
| Approved | Talat SAHIM | | | | | | |

TTAF®

| Drawing No | Scale | Sheet |
|---|---|---|
| - | 1:1 | 1/1 |

A4

Form No: FR.80 İYT: 05/05/2017 Rev:00 __/__/____