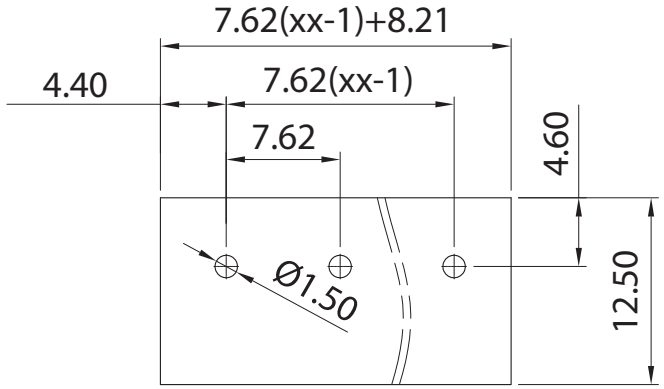

p.c.b. layout

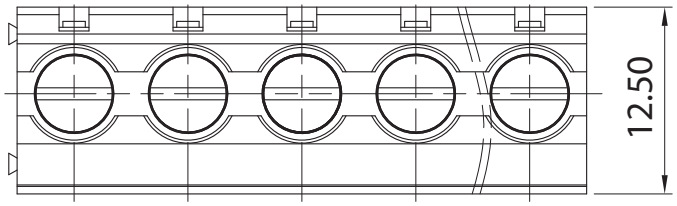

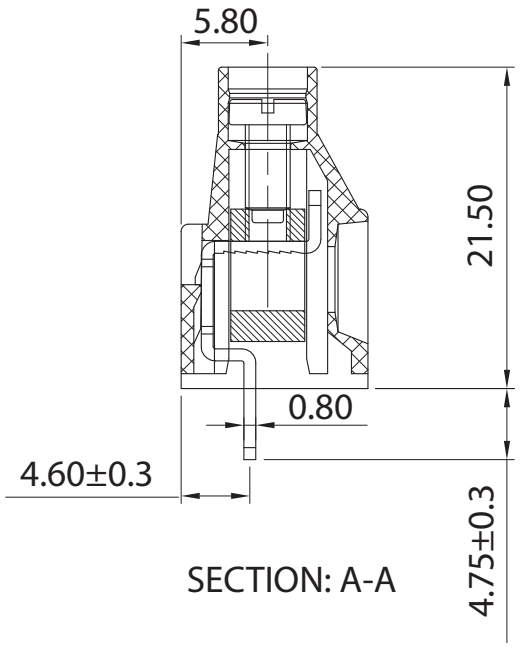

SECTION: A-A

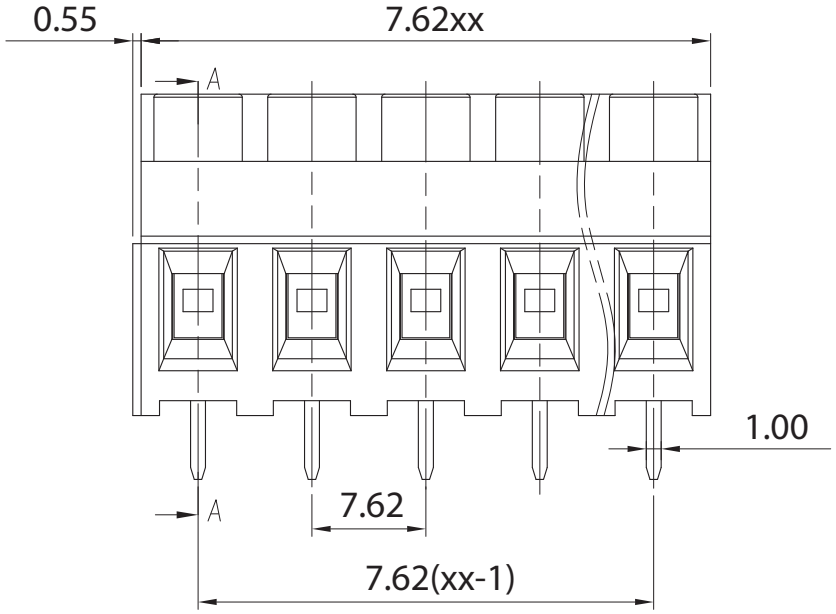

Approvals

c UL us — 30A - 300V

Electrical

Rated voltage IEC	630V
Rated current IEC	32A
Contact resistance	20Ω
Insulation resistance	500MΩ/DC500V
Withstanding voltage	AC2000V/1 min
Wire range	4 mm2 26÷10 AWG
Torque	0,5Nm (4,5 Lb in)
Temp. Range	-40°C + 105°C
Stripping lenght	7 mm
Max sold. time	+250°C for 5 sec.

Dimensions

Pitch	7,62 mm
Poles	2÷24

Material

Housing	PA66 UL94V0
Pin	Brass, tin plated
Cage	Brass, tin plated
Screws	M3, Steel, Zn plated
Side Block	---
Nut screw	---
Clamp	---

General description of ordering code

Series	n. Poles	Pitch	Version	Color	Custom
MRS74	2÷24	-7.62	-V		

Version	Date
01/26	30/01/26

euro-block

RoHS Compliant Lead Free — CE

UNITS: mm	SHEET SIZE: ISO A4	SCALE: 2:1	
> 0 ~ 3	> 3 ~ 18	> 18 ~ 50	> 50 ~ 120
± 0.12	± 0.15	± 0.3	± 0.5

First angle projec on

MRS74-7.62-V