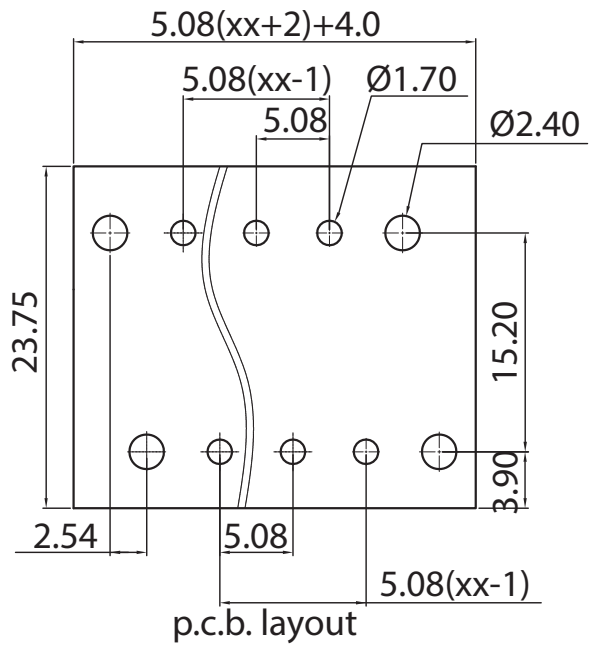

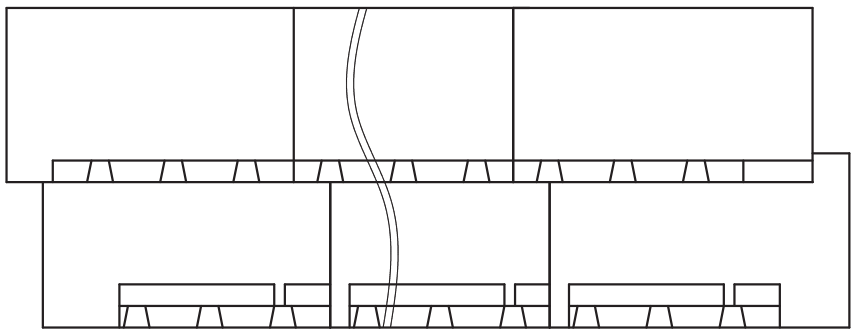

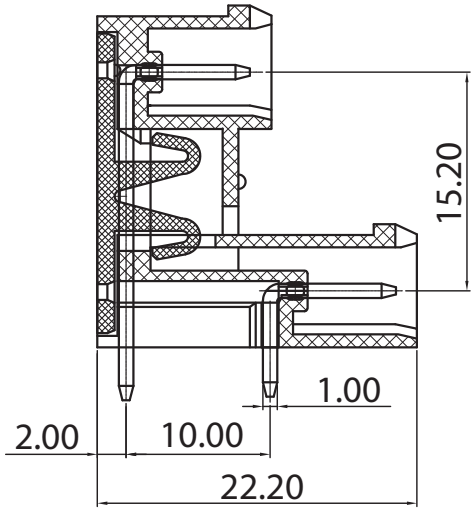

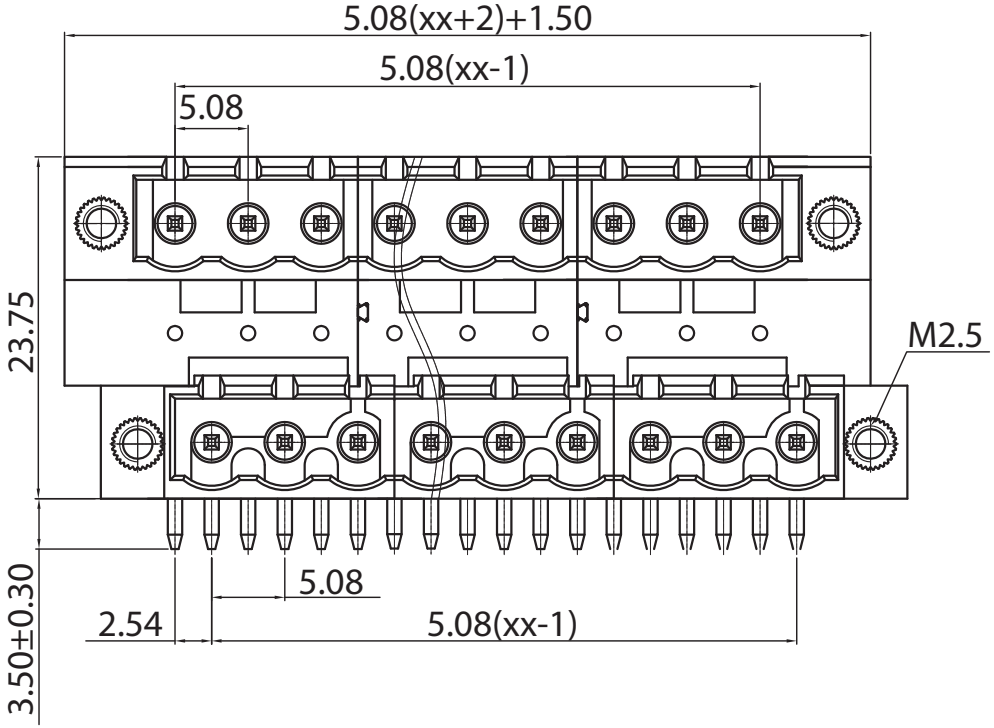

Approvals

c UL us — 15A-300V

Electrical

Rated voltage IEC	320V
Rated current IEC	10A
Contact resistance	20mΩ
Insulation resistance	500MΩ/DC500V
Withstanding voltage	AC1600V1 min
Wire range	
Torque	
Temp. Range	-40°C+105°C
Stripping lenght	
Max sold. time	+250°C for 5 sec

Dimensions

Pitch	5.08 mm
Poles	2+2÷3+3

Material

Housing	PA66 UL94V0
Pin	Copper Alloy, tin plated
Cage	
Screws	
Side Block	
Nut screw	
Clamp	

General description of ordering code

Series	n. Poles	Pitch	Version	Color	Custom
CMD	02÷22	-5.08	-HF		

Version	Date
01/26	21/05/26

euro-block

RoHS Compliant Lead Free

CE

UNITS: mm	SHEET SIZE: ISO A4	SCALE: 10:1	
> 0 ~ 3	> 3 ~ 18	> 18 ~ 50	> 50 ~ 120
± 0.12	± 0.15	± 0.3	± 0.5

First angle projection

CMD-5.08-HF